DOGA®
ASSEMBLY TECHNOLOGY

Instruction manual

BS-5C COLOR ID BIT TRAY

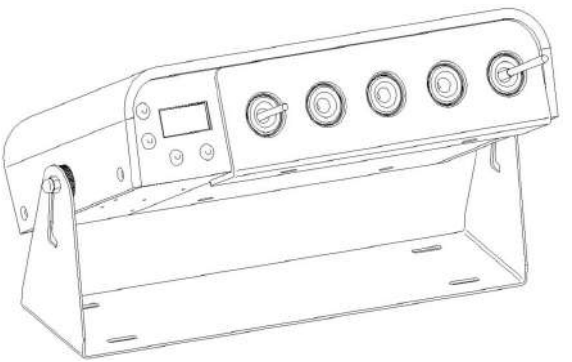

EN

60327-06/20

www.dogassembly.com

CONTENTS

REMARKS ABOUT THE MANUAL

Symbols

Information
This warning statement indicates important information (for example: damage to property), but no hazard.

Information
Information to view in your customer area on the www.doga.fr web site.

Caution
This warning statement indicates a low risk that may lead to minor or moderate injuries if not avoided.

Wear personal protection equipment
This symbol indicates the need to wear protective gloves.

Warning
This warning statement indicates a moderate risk that may lead to severe or fatal injuries if not avoided.

1. INFORMATION

1.1 IMPORTANT

The tool supplied with this manual may have been altered to meet specific needs.
If this is the case, when ordering a renewal or spare parts, please indicate the tool item code featured on the delivery document, or contact **DOGA** at **+33 1 30 66 41 41** indicating the approximate delivery date. You will then be sure to get the required tool and/or parts.

1.2 Product reference

Description	BS-5C color ID bit tray
Type	R0001-000-RD000

1.3 General equipment description

The DOGA BS-5C bit tray is an equipment designed to deliver the bits required for assembly operations.
It operates on any multi-program electric screwdriver as well as systems (sequencers and PLC) with 24 V direct current inputs / outputs.
It provides the correspondence between the assembly programs and the bits.
Absolute bit foolproofing is provided by color coding, making it possible to guarantee error-free screwed assemblies.

The bit tray has two operating modes:

1.3.1 Master mode operation

In this mode, operators can use whichever bit they require (one at a time).
The bit tray is a screwedriver controller external command and picking a bit will select a tightening program.

1.3.2 Slave mode operation

In this mode, the selection of a tightening program (either by the operator or job manager PLC as DPC Touch), the bit tray indicates which bit to use to perform the program.

1.4 Standard equipment presentation

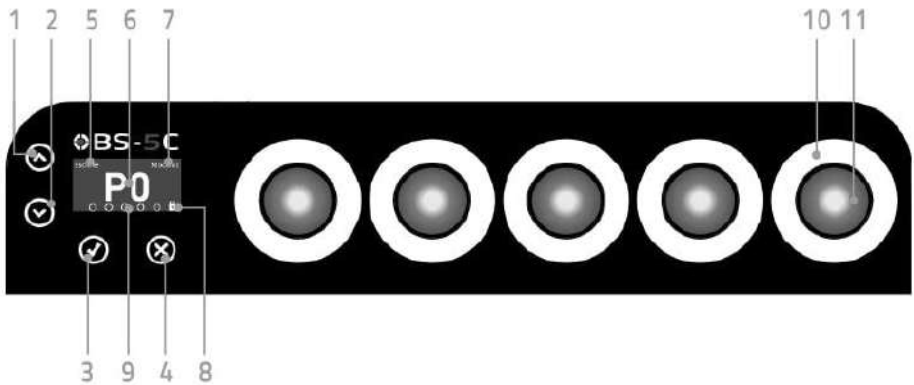

1	Button up	7	Modbus indicator
2	Button down	8	Screwdriver locked
3	Menu opening / Validation	9	Bit presence indicator
4	Back / Cancel	10	LED ring indicator x 5
5	Operating mode indicator	11	Bit slot x 5
6	Screwdriver program		

1.5 Packing list

X 1 bit tray without bit holder

X 1 power supply

X 1 user manual

X 4 kits of 5 different colored sleeves

1.6 Technical specifications

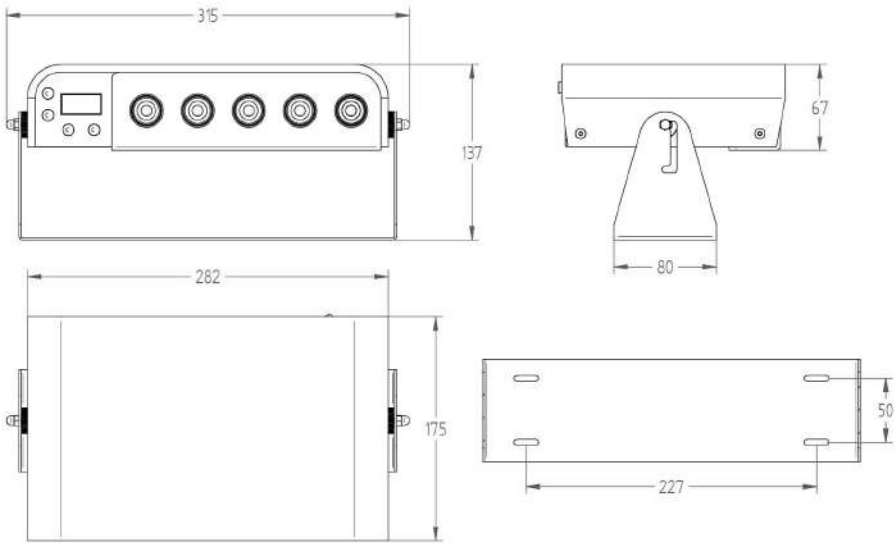

Dimensions in millimeters

Electric specifications	
Power supply	24 V ⎓ 1 A
Mains adapter	100-240 V ~ 50 - 60 Hz
Plug type	Europe / UK / US
Consumption	25 W max

Physical specifications

Number of slots	5
Width	282 mm
Depth	175 mm
Height	67 mm
Dimensions with packaging (W x H x D)	350 x 280 x 150 mm
Weight with power supply	2.5 kg
Weight with packaging	3.1 kg
Operating temperature	15 - 40°C
Operating humidity	15 - 85% RH
Sound level	32 dB (A)
User interface	
Operating modes	Master and slave
Keyboard	4 push buttons
Display	OLED monochrome graphic screen
	5 RGB LED ring indicators
Languages	French
	English
	Italian
	German
	Spanish
	Czech
Protection class and rating	
Equipment class	Class II: insulated casing
IP rating	IP 4X: equipment protected against solid objects over 1 mm

2. STARTING UP

2.1 Workstation description

The bit tray is used on a workstation with assembly tools requiring the use of several bits.

2.2 Unpacking

Remove the bit tray from its packaging.

Information
Before each use, check the packaging contents for damage and possible deterioration.
Do not use the device if you see that it is damaged.

Warning
Suffocation risk!
Do not leave empty packaging lying around.

Eliminate the packaging in compliance with applicable national legislation.

2.3 Configuration

2.3.1 Bit customization

As bit foolproofing is color coded, it is essential to use a different color marking on each bit to operate properly the bit tray.

Information
Only original sleeves supplied by DOGA have been tested and validated for faultless operation.

There are 3 sizes for the coloured heat-shrinkable sleeves in order to adapt to the bit's diameter
Size 1: 2.4 mm ≤ d ≤ 4.8 mm
Size 2: 3.2 mm ≤ d ≤ 6.4 mm
Size 3: 4.7 mm ≤ d ≤ à 9.5 mm

The colored heat-shrinkable sleeves are to be placed on the bits depending on their length:

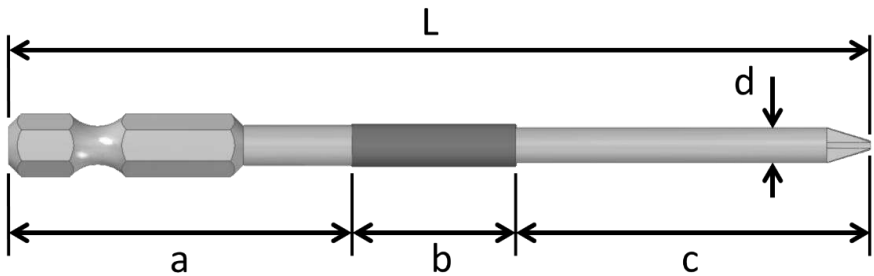

L	a	B min	c
49 - 64 mm	-	20	4
65 - 84 mm	18	20	-
85 - 115 mm	38	20	-
115 - 144 mm	68	20	-
> 145 mm	98	20	-

Set the hot air gun to 90°C in order to shrink the sleeves onto the bits.

Caution
Burn risk: the bits must be held using pliers when the sleeves are

heated, they can rise to a temperature of 90°C.

Caution
Wearing protective gloves is recommended for this operation in order to avoid burn risks.

2.3.2 Slot configuration

The BS-5C bit tray initial configuration is such that it can accept 70 mm long bits in each slot.
Configuring the bit tray to bit length is done by placing stop cleats.

Choice of bit holders

Bit holders are selected according to the diameter and the length of the bit they should hold.
The following table let you choose the correct bit holder

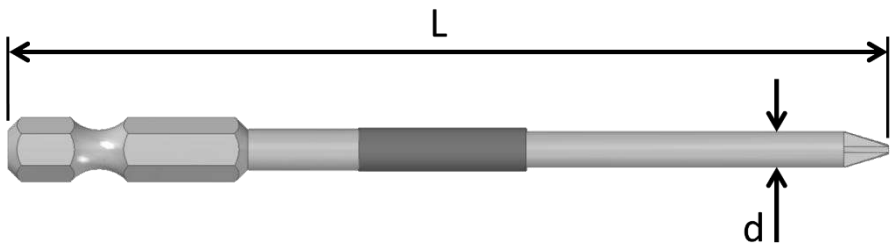

	d					
L	**< 3 mm**	**3 - 3.9 mm**	**4 - 4.9 mm**	**5 - 5.9 mm**	**6 - 7 mm**	**> 7 mm**
49 - 64 mm	C	C	C	A	A	D
65 - 84 mm	B	B	A	A	A	D
85 - 115 mm	B	B	B	A	A	D
115 - 144 mm	B	B	B	B	A	D
> 145 mm	B	B	B	B	A	D

Choice A: Standard bit holder for hexagonal ¼” bits

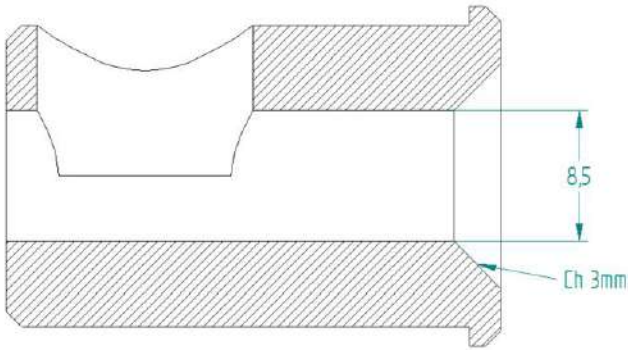

Choice B et D : Solid bit holder machined according to the following drawing

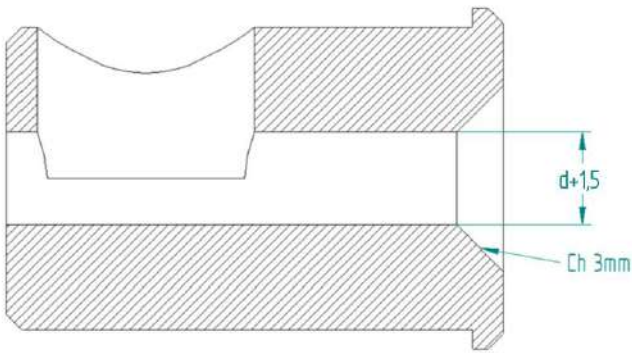

Choice C : Solid bit holder machined according to the following drawing

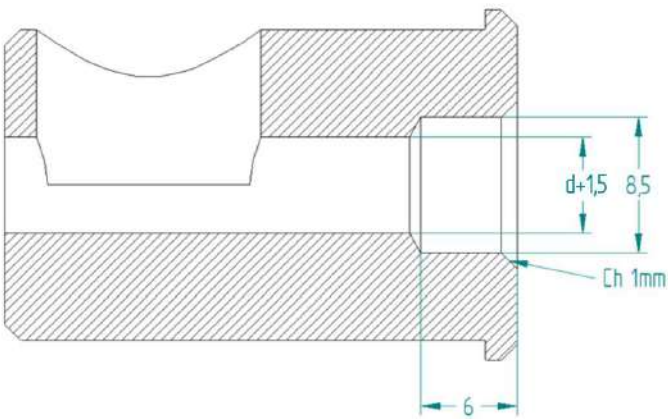

Removal of the bit tray lower part

01

Place the bit tray upside down on a table.

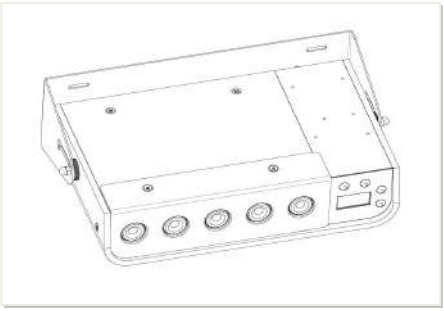

02

Remove the 4 screws under the bit tray.

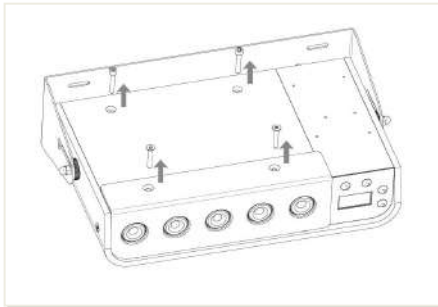

03

Remove the transparent protective crankcase.

04

Remove the lower part of the bit tray.

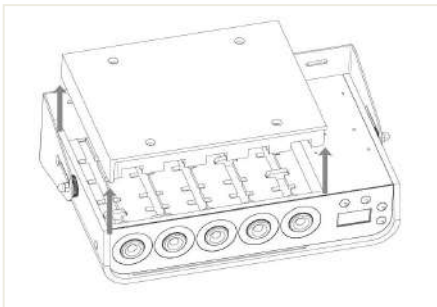

Fitting the bit holders

Bit holders make possible to adjust locating to bit diameters.

The bit holders are delivered with a locating pin used to hold them in position.

01

Insert the bit holder from the outside.

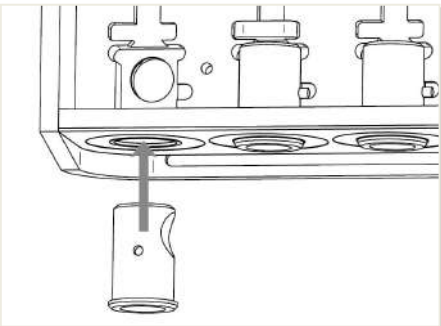

02

Position it so that the drill hole can be seen at the top.

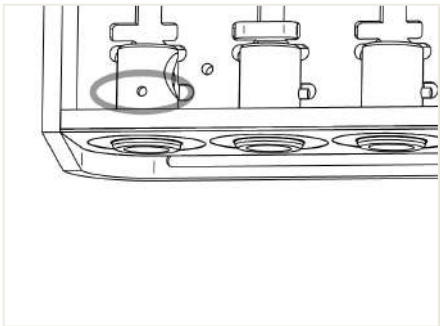

03

Insert the locating pin into the drill hole on the bit holder.

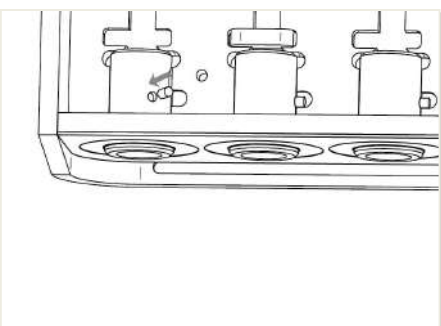

04

Rotate the bit holder to locate pin in its housing.

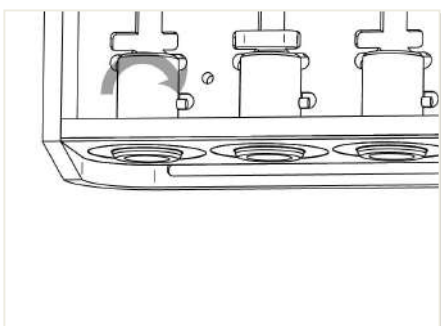

Fitting the cleats

Cleats stop the bit to adapt sleeve position to bit lengths.

- Fit the cleats depending on your bit lengths:

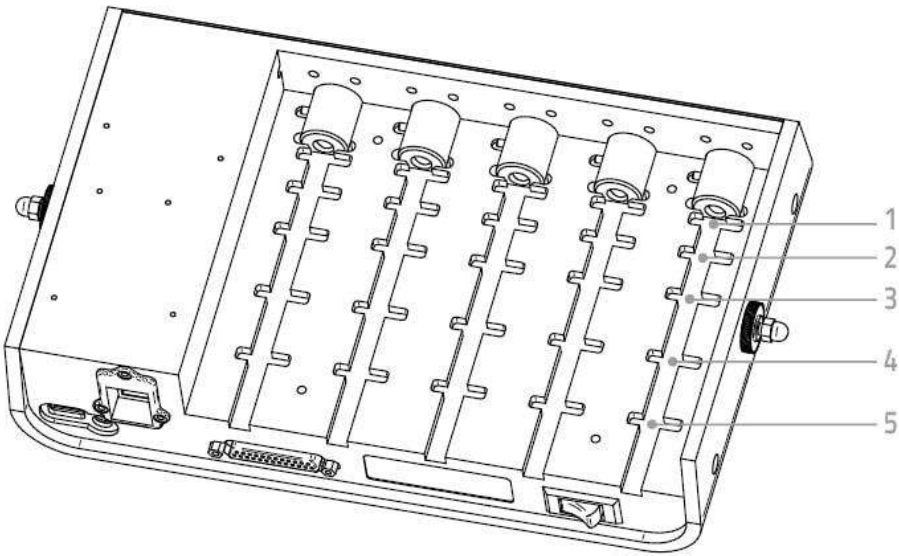

1	49 - 64 mm	4	115 - 144 mm
2	65 - 84 mm	5	≥ 145 mm
3	85 - 114 mm		

- Refit the lower part of the bit tray and the transparent protective crankcase and tight the 4 screws.

2.3.3 Bit tray connection

Plug the power supply and the jack connector.

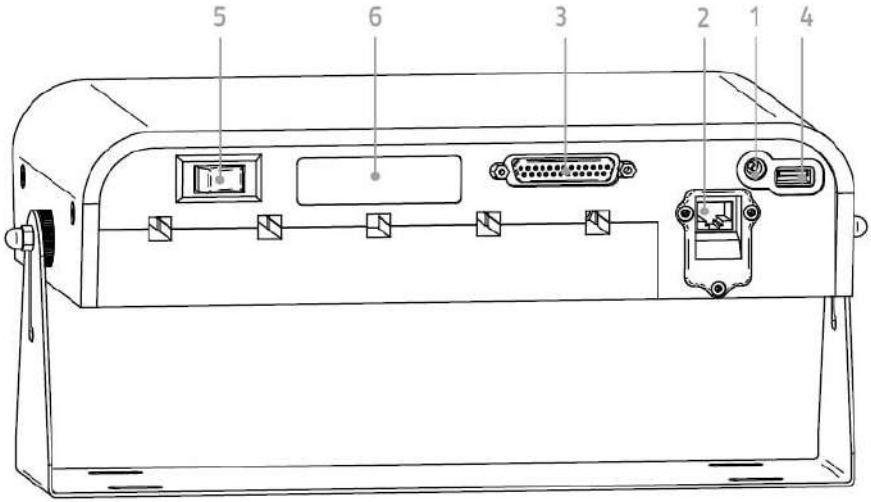

1	Jack power supply connector, D2.1 mm x D5.5mm, 24V CC 1.5 A + voltage in the center: ⊖-◉-⊕
2	Ethernet RJ45 connector for Modbus (option to be released) TCP connection to the DOGA MDC controller only.
3	Sub D 25 connector for digital inputs / outputs
4	5 Slots extension connector
5	On / off button
6	Label

Caution

The extension connector (4) looks like a type A USB but is not USB compatible.

Do not connect any USB devices to it as this could damage them.

2.3.4 Connection to tightening controller

The bit tray can be connected to the controller in two ways:

- Communication using the digital inputs/outputs on the Sub D 25 (blue) connector.
- TCP Modbus communication using an Ethernet cable on the RJ45 socket (function not enabled - development in progress).

Information
Sub D25 connector description
See annex 1.

With I/O's 3 operating modes are available:

- Direct
- Binary
- Binary + 1

Information
To identify the different mode types, refer to the program input / output correspondence table.
See annex 2.

2.3.5 Connection to the assembly controller

The bit tray is directly compatible with the following controllers:
MDC series, SD / HD series, DPC Touch interface, STANLEY controller ALPHA V "QBE" Expert and ALPHA V "QBE" Advanced series.

- Preferably use a connecting cable dedicated to your controller model and sold by DOGA.
- Refer to annex 3 to configure your equipment connected to the bit tray.

2.4 Installation

2.4.1 Bit tray installation

We recommend fixing the BS-5C bit tray to the workstation and locking its position using the blind nuts located on its sides.

The bit tray can be fixed to the workstation in several ways:

On the work top	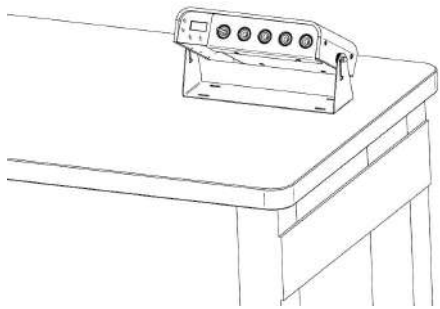
Under the work top	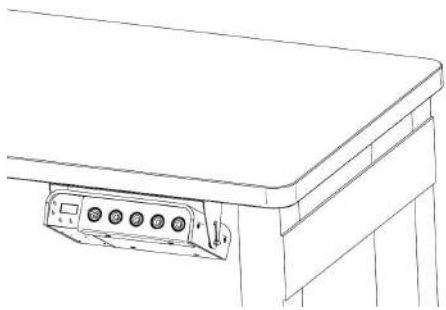
Vertically, on the side of the work bench	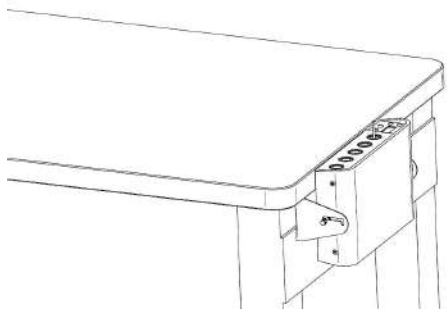

2.4.2 Bit installation

The bits are inserted into the slots so that the imprints are visible, except for 49 to 64 mm long bits and in bit holders of choices B and C described in section 2.3.2.

This makes it easier to identify the bit to use.

Caution
We recommend wearing protective gloves when using small sized bits in order to avoid pricking or cutting risks.

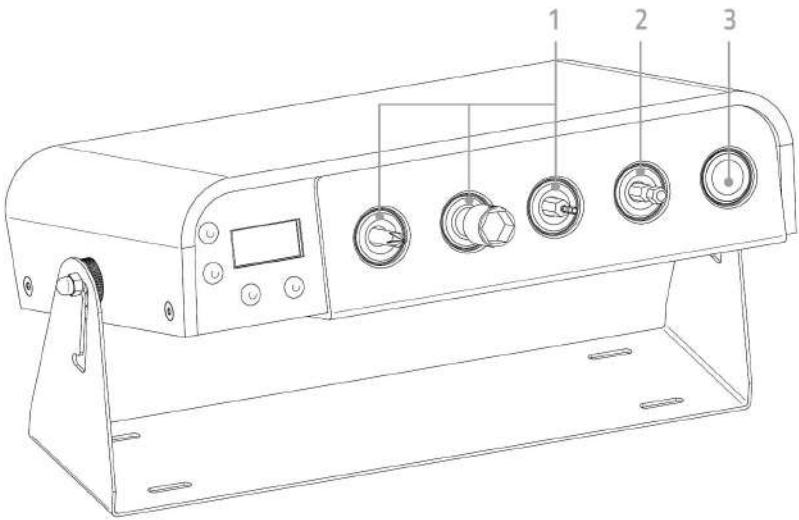

1	Normal position: footprints towards the outside
2	Position for bits 49 to 64 mm long and in bit holders of choices B and C described in section 2.3.2: imprints towards the inside
3	Slot blocked by a full bit holder

3. SETTINGS

3.1 Access to the settings menu

The settings menu is opened by pressing the button
A password is requested. Factory setting is **0000** by default. It can be deleted or changed in the Password menu.

	Validation and access to the settings menu
	Cancel and back to the settings menu
	Scrolling up through the settings menus
	Scrolling down through the settings menus

3.2 Access to the settings menu

3.2.1 Settings menu tree structure

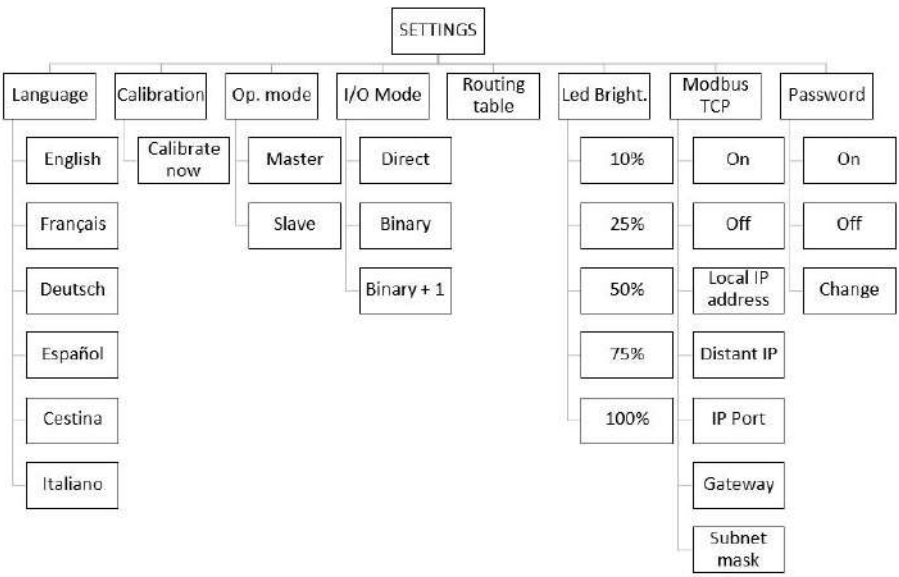

3.2.2 Settings menu description

Language	Language selection in the settings menu
Calibration	Bit position learning is automated. See section 3.3
Operating mode	Selection of the master or slave operating mode See section 3.4
I/O mode	I/O operating mode program selection see **ANNEX 2**
Routing table	The routing table contains the assembly program number assignment per location See section 3.5
LED light brightness	Led ring indicator brightness setting
TCP Modbus *	Network setting adjustment for the Modbus TCP connection (only for MDC controllers). * Feature not available - currently being developed
Password	Menu locking password activation and reset

3.3 Calibration

Bit position learning is auto-teach by selecting calibration from the menu.

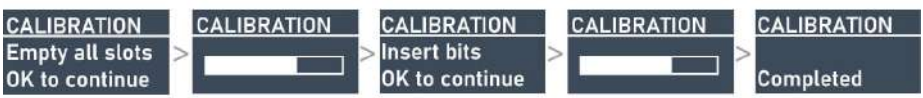

Calibration is in 2 steps:

1. Empty bit tray calibration (without bits).
2. Calibration with bits.

Once these 2 steps are completed, the bits are linked to their slots.

3.4 Operating mode configuration

3.4.1 Master mode operation

In this mode, operators can use whichever bit they require (one at a time). The bit tray selects the corresponding program on the tool controller.

3.4.2 Slave mode operation

In this mode, when a program is selected (either by the operator or job manager PLC as DPC Touch), the bit tray shows the operator which bit to use.

3.5 Routing table configuration

Factory setting: bit assignment to the program is direct:

- Program 1 corresponds to location 1
- Program 2 corresponds to location 2
- Etc…

A program number can be defined for each bit.

3.5.1 Master mode routing

Select the slot then, select the associated program.

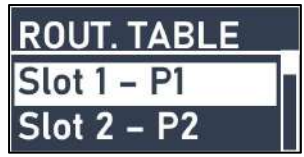

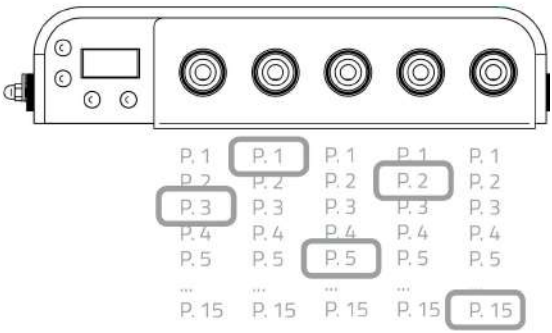

3.5.2 Slave mode routing

Select the program, choose the associated slot.

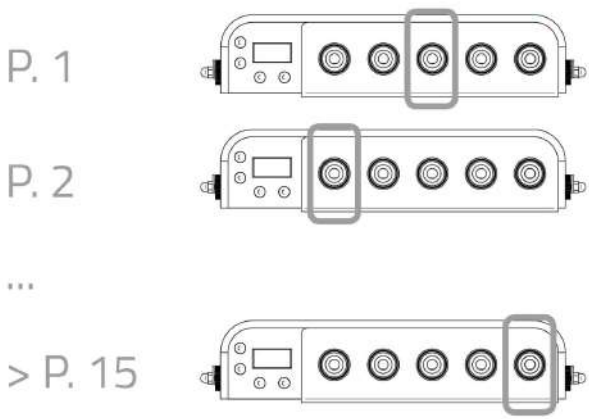

4. USE

4.1 Start and stop the device

To start the device, press the on/off switch so that the “ON” side is lowest. The display screen comes on.
To stop the device, press the on/off switch so that the “OFF” side is lowest. The display screen turns off.

4.2 Use in master mode

If all the bits are in their slot, the tool is on standby and locked. Select the bit to use: the associated program is activated and the assembly tool is unlocked.
When the bit returns to its slot, the assembly tool is re-locked.
If 2 bits are removed from their slot at the same time, the tool is locks.
If the bits are not in their respective slots, the tool is locked.

4.3 Use in slave mode

If all the bits are in their slot, the tool is on standby and locked. If a PLC selects a program or if selection is done by tool controller, the indicator for the corresponding slot lights. Pick the bit to use: the program is activated and the assembly tool is unlocked.
If 2 bits are removed from their slot at the same time, the tool locks.
If the bits are not in their respective slots, the tool is locked.

5. MAINTENANCE

5.1 Servicing

Color detection can alter over time due to dust or soiling.
Regular color sensor glass cleaning should be carried out using a clean, dry, non-fluff cloth, in order to keep them clear.
The color sensor glasses are under the bit holders.
color sensor glasses can be accessed by removing the lower part of the bit tray as described in section 2.3.2.

5.2 Troubleshooting

The device operation has been checked several times in a production situation. Despite that, if the device has a malfunction, check it using the list below.

Caution
All repair tasks requiring the box to be opened must be carried out by DOGA or a contractor authorized by DOGA.

Malfunction	Action to take
Bit detection does not work or only works intermittently on one or more slots	• Re-calibrate the bits • Check that the colored sleeves are properly positioned on the bits and are not soiled • Clean the color sensor glasses
The bit tray will not switch on	• Check that the mains adapter is plugged in, and that the plug is connected to the jack connector • Check the adapter voltage, current and polarity (24V CC, 1 A, ⊖-◐-⊕) • Make sure the ON / OFF switch is in the ON position

Malfunction	Action to take
The bit tray does not keep the requested position	Tighten the two side bolts used to fix the bit tray to its metal support
The password does not work or has been forgotten	Contact DOGA after-sales department
Even after having been checked, the device is not fully operational.	Contact DOGA after-sales department

If, despite reading this manual, you are unable to solve a problem, please contact the DOGA after-sales department.

My client area on www.doga.fr

Go to your client area on www.doga.fr, click “Your contacts”, then select your specific **After-sales department contact** depending on the device type.

5.3 Spare parts

Protective crankcase	
Clear facade	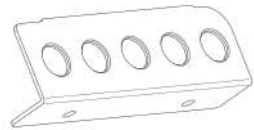

5.4 Phone support

5.4.1 For any questions about using the device

Please contact your technical salesperson

My client area on www.doga.fr
Go to your client area on www.doga.fr, click “Your contacts”, then select your specific **technical salesperson contact** depending on the device type.

5.4.2 For any questions about repairs

Please contact your After-sales department contact.

My client area on www.doga.fr
Go to your client area on www.doga.fr, click “Your contacts”, then select your specific **After-sales department contact** depending on the device type.

If your technician is unable to determine the cause of the problem remotely, they will give you the procedure to make the repair yourselves if possible.

5.5 After-sales returns

It is imperative that all returned equipment has a completed after-sales return form attached to the shipment.
The repair, maintenance, calibration or adjustment service cannot be initiated without this form.

Information

Compliance with this procedure means that your request will be processed quickly with reduced troubleshooting costs.
DOGA reserves the right to apply a trade-in discount and, when applicable, to invoice repair and packaging costs.

5.5.1 Download the after-sales return form

You can download the form using one of the following links:

http://service.doga.fr/syst/dogatech.nsf/liste/00184

https://www.doga.fr/en/our-services/industrial-maintenance

Information

You can use your own after-sales return form if it contains all the data required to work on your device as listed below.

5.5.3 Send your equipment

Returned parcels must be sent carriage paid to the following addresses depending on your transport mode:

Postal parcels	Carrier parcels
DOGA - Service SAV 8, avenue Gutenberg - CS 50510 78317 Maurepas Cedex, France	DOGA - Service SAV 11, rue Lavoisier 78310 MAUREPAS, France

5.6 On-site repair

Even though it seems convenient, on-site repair is seldom the best solution for transportable equipment. The conditions in which the trchnician will work are worst than in our workshops and technician travel expenses are costly.

If you require an on-site intervention, please contact the After-sales department.

My client area on www.doga.fr
Go to your client area on www.doga.fr, click “Your contacts”, then select your specific **After-sales department contact** depending on the device type.

Our services will organize the intervention.

5.7 Warranty

DOGA guarantees its products for parts or manufacturing defects for 12 months.

To benefit from this parts and labor warranty, the following conditions must be met:

- The device must have been used in a professional context and in compliance with the normal use conditions described in this user manual.
- The device must not have suffered storage, maintenance or incorrect handling related damage.
- The device must not have been adapted or repaired by unqualified persons.

6. SAFETY

6.1 General provisions

This user manual must be kept carefully in a known location that is of easy access to product users.

Caution
Read, and require each operator to read this manual before installing, using or repairing the product.

Make absolutely sure that operators have perfectly understood the use rules and the meaning of the eventual symbols placed on the product.

Most accidents could be avoided by following the user manual instructions.
These have been drawn up relative to European directives and their amendments as well as with product related standards.
In all cases, follow and comply with national safety standards. Do not remove or damage the labels and statements placed on the product, especially those imposed by law.

6.2 Residual risks

Burn risks
Handling a hot air gun when customizing bits using heat shrinkable sleeves exposes to a temperature of 90°C. We recommend handling the bits using pliers and wearing protective gloves.

Pricking or cutting risks

The bits in the bit tray can cause injury. We recommend wearing protective gloves when using small sized bits with the bit tray.

Risk of injury

A person colliding with the bit tray with part of their body (not protected by safety equipment) would be exposed to risk of injury.

6.3 Contra-indications

Do not cover.

Do not immerse.

Do not expose to liquid spray.

Do not use near a heat source.

7. STANDARDS

7.1 Manufacturer details

Manufacturer: DOGA
Address: ZA Pariwest
8 avenue Gutenberg CS 50510
78317 MAUREPAS CEDEX - FRANCE

7.2 Markings

BS-5C color ID bit tray	Equipment name
Type	Equipment reference
Serial no.	Unique equipment serial number
DOGA 8 avenue Gutenberg – CS 50510 78317 Maurepas Cedex – FRANCE	Equipment manufacturer name and address
Year xxxx	Equipment year of manufacture
CE	Equipment designed and built in compliance with the requirements of European directives 2014/35/EU, 2014/30/EU and 2011/65/EU
	All safety instructions and other instructions must be read

7.3 Transport and storage

Information
Your equipment may be damaged if you transport or store it in unsuitable conditions. Comply with the transport and storage information for your equipment.

7.3.1 Transport

Use a container suitable for the transport of the equipment in order to protect it from external influences.

Comply with the following instructions before each transport:

- Shut down the device
- Disconnect the power supply cord

7.3.2 Storage

Comply with the following instructions before storing:

- Shut down the device
- Disconnect the power supply cord
- Clean the device following the indications in the Maintenance section.
- Store it in a suitable container to protect it from dust and exposure to direct sunlight.
- Store it in a dry location at a temperature below 40°C.

7.4 WEEE recycling and end of service life

The symbol showing a crossed out trash container, when placed on an electric or electronic device, means that it should not be disposed of with household trash.

Collection solutions are the following:

7.4.1 Collection and recycling scheme

In compliance with the French Environmental Code covering professional Waste Electric and Electronic Equipment (WEEE) (art. R543-195 et seq.), DOGA is a member of ECOSYSTEM, an eco-organization approved by public authorities under the conditions defined by art. R564-197.

You can also benefit from collection and recycling system proposed by ECOSYSTEM for WEEE originating from the professional equipment marketed by DOGA. Further information on www.ecosystem.eco.

7.4.2 Collection points

Free collection points for used electric or electronic devices are available near your company.

Your local authorities can provide their addresses.

8. ANNEXES

Annex 1 - Sub D25 connector description

No.	Direct	Binary, Binary + 1
1	Selection 1 input	Selection 1 input
2	Selection 2 input	Selection 2 input
3	Selection 3 input	Selection 3 input
4	Selection 4 input	Selection 4 input
5	Selection 5 input	-
6	Selection 6 input	-
7	Selection 7 input	-
8	Selection 8 input	-
9	Selection 1 output	Selection 1 output
10	Selection 2 output	Selection 2 output
11	Selection 3 output	Selection 3 output
12	Selection 4 output	Selection 4 output
13	Selection 5 output	-
14	Selection 6 output	-
15	Selection 7 output	-
16	Selection 8 output	-
17	-	-
18	Tool available output	Tool available output
19	Alarm output (tool disable)	Alarm (tool disable)
20	Ground	Ground
21	24V	24V
22	-	-
23	Common inputs	Common inputs
24	Common outputs	Common outputs
25	-	-

Annex 2 - Input / output program correspondence table

	Direct								Binary								Binary + 1							
Program	1	2	3	4	5	6	7	8	1	2	3	4	5	6	7	8	1	2	3	4	5	6	7	8
1	1	0	0	0	0	0	0	0	1	0	0	0	0	0	0	0	0	0	0	0	0	0	0	0
2	0	1	0	0	0	0	0	0	0	1	0	0	0	0	0	0	1	0	0	0	0	0	0	0
3	0	0	1	0	0	0	0	0	1	1	0	0	0	0	0	0	0	1	0	0	0	0	0	0
4	0	0	0	1	0	0	0	0	0	0	1	0	0	0	0	0	1	1	0	0	0	0	0	0
5	0	0	0	0	1	0	0	0	1	0	1	0	0	0	0	0	0	0	1	0	0	0	0	0
6	0	0	0	0	0	1	0	0	1	1	1	0	0	0	0	0	1	0	1	0	0	0	0	0
7	0	0	0	0	0	0	1	0	0	0	0	1	0	0	0	0	1	1	1	0	0	0	0	0
8	0	0	0	0	0	0	0	1	1	0	0	1	0	0	0	0	0	0	0	1	0	0	0	0
9									1	1	0	1	0	0	0	0	1	0	0	1	0	0	0	0
10									1	1	1	1	0	0	0	0	1	1	0	1	0	0	0	0
11									0	0	0	0	1	0	0	0	1	1	1	1	0	0	0	0
12									1	0	0	0	1	0	0	0	0	0	0	0	1	0	0	0
13									1	1	0	0	1	0	0	0	1	0	0	0	1	0	0	0
14									1	1	1	0	1	0	0	0	1	1	0	0	1	0	0	0
15									1	1	1	1	1	0	0	0	1	1	1	0	1	0	0	0

Annex 3 - Configuration of equipment connected to the bit tray

MD series controller

Enter the parameters using menu > parameters > inputs/outputs

Input configuration:

Input 1	Program 1
Input 2	Program 2
Input 3	Program 3
Input 4	None (not assigned)
Input 5	None (not assigned)
Input 6	Tool lock
Input 7	None (not assigned)
Input 8	None (not assigned)

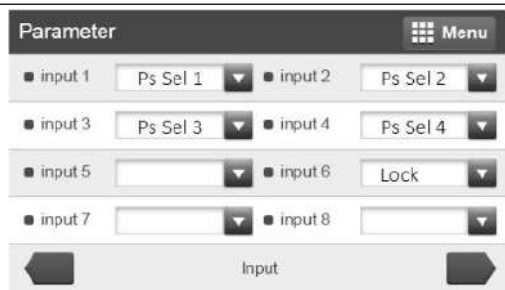

Output configuration:

Output 1	Selection 1 return
Output 2	Selection 2 return
Output 3	Selection 3 return
Output 4	None (not assigned)
Output 5	None (not assigned)
Output 6	None (not assigned)
Output 7	None (not assigned)
Output 8	None (not assigned)

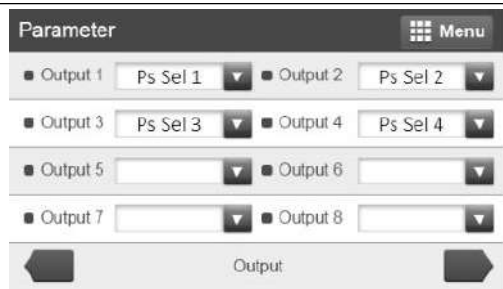

SD / HD series controller (in master mode only)

HDC controller	P64 = 1 or 3
SDC controller	P20 = 1 or 2 - P86 = 0

DPC Touch interface

Inputs and outputs 9, 10, 11 and 12 must remain unassigned in order to create a continuous type output step to select the corresponding bit.

STANLEY series ALPHA V “QBE” Expert and ALPHA V “QBE” Advanced controller

Pins F, G, H, J and P, R, S, T are used to select the assembly bit

Configure the outputs using menu:

Setup \ Other > I/O > 24V (Out)

Out F	24V (Out) C IN CYCLE D READY E DISASSEMBLY DETECTED F JOB SELECTED (BIT)	F JOB SELECTED (BIT) Contact Type: N.O. Bit: 0 Mode: BINARY
Out G	24V (Out) C IN CYCLE D READY E DISASSEMBLY DETECTED F JOB SELECTED (BIT) G JOB SELECTED (BIT)	G JOB SELECTED (BIT) Contact Type: N.O. Bit: 1 Mode: BINARY
Out H	24V (Out) C IN CYCLE D READY E DISASSEMBLY DETECTED F JOB SELECTED (BIT) G JOB SELECTED (BIT) H JOB SELECTED (BIT)	H JOB SELECTED (BIT) Contact Type: N.O. Bit: 2 Mode: BINARY
Out J	24V (Out) C IN CYCLE D READY E DISASSEMBLY DETECTED F JOB SELECTED (BIT) G JOB SELECTED (BIT) H JOB SELECTED (BIT) J JOB SELECTED (BIT)	J JOB SELECTED (BIT) Contact Type: N.O. Bit: 3 Mode: BINARY

Configure the inputs using menu:

Setup \ Other > I/O > 24V (In)

In M	24V (In): L START, M STOP M STOP: Contact Type N.O.
In P	24V (In): L START, M STOP, N REVERSE, P SELECT JOB (BIT) P SELECT JOB (BIT): Contact Type N.O., Bit 0, Mode BINARY
In R	24V (In): L START, M STOP, N REVERSE, P SELECT JOB (BIT), R SELECT JOB (BIT) R SELECT JOB (BIT): Contact Type N.O., Bit 1, Mode BINARY
In S	24V (In): L START, M STOP, N REVERSE, P SELECT JOB (BIT), R SELECT JOB (BIT), S SELECT JOB (BIT) S SELECT JOB (BIT): Contact Type N.O., Bit 2, Mode BINARY
In T	24V (In): L START, M STOP, N REVERSE, P SELECT JOB (BIT), R SELECT JOB (BIT), S SELECT JOB (BIT), T SELECT JOB (BIT) T SELECT JOB (BIT): Contact Type N.O., Bit 3, Mode BINARY

Download
the latest version of this user manual
using the following link by scanning this QR code
Or by clicking this link:
http://service.doga.fr/syst/dogatech.nsf/liste/60327

DOGA | ASSEMBLY TECHNOLOGY
international@doga.fr
+33 1 30 66 41 41
8, avenue Gutenberg - CS 50510
78317 Maurepas Cedex - FRANCE